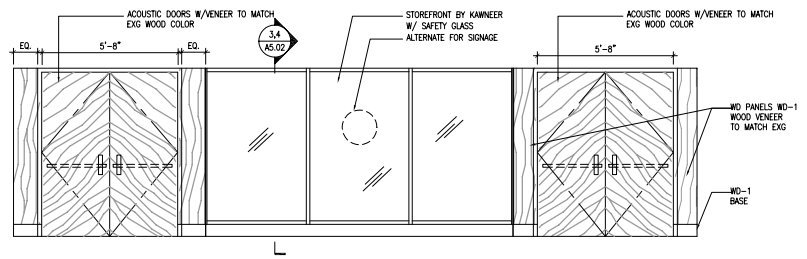

8 A5.02 VESTIBULE ELEVATION
3/8"=1'-0"

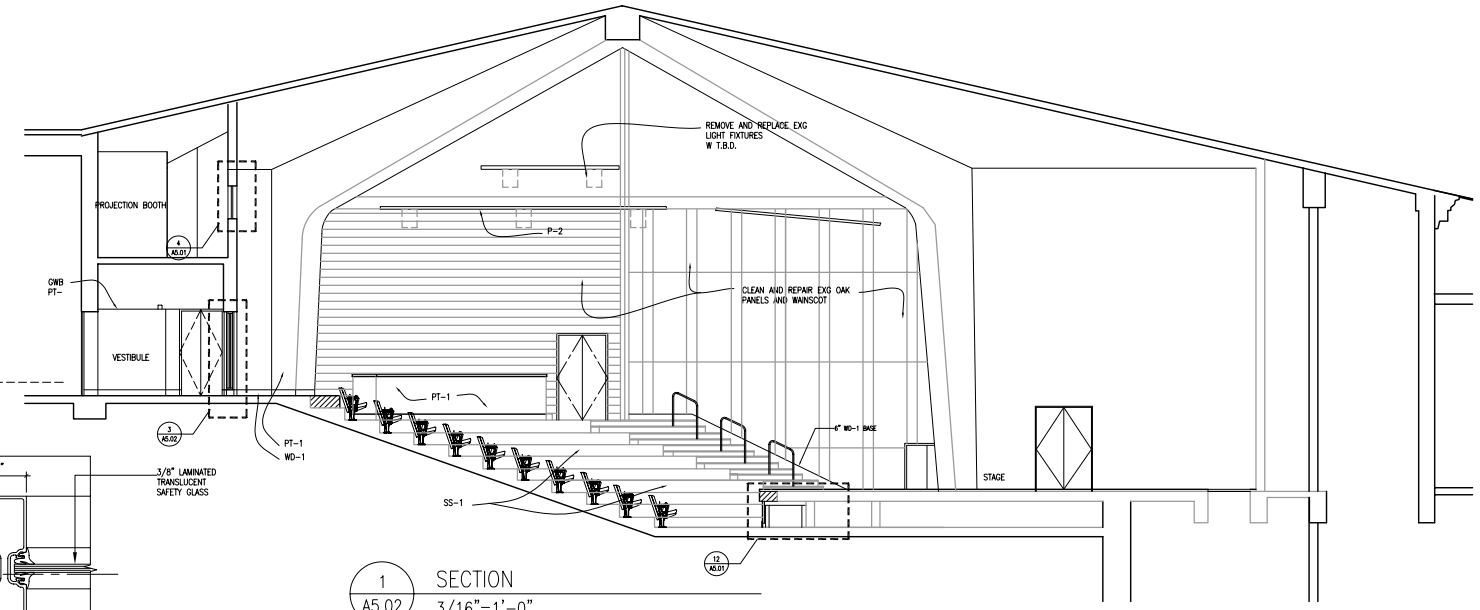

1 A5.02 SECTION
3/16"=1'-0"

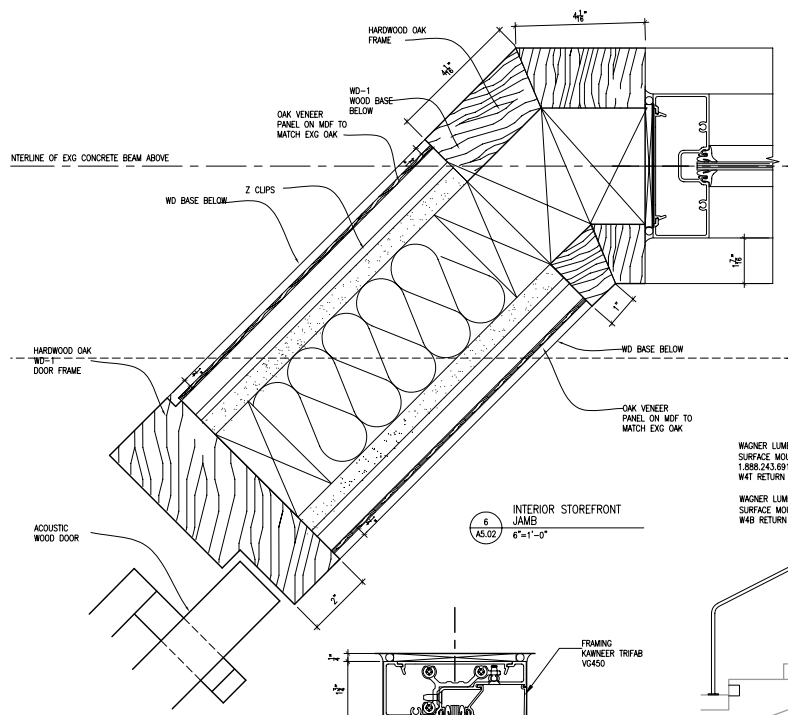

5 A5.02 INTERIOR STOREFRONT JAMB
6"=1'-0"

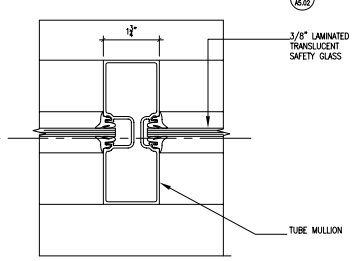

5 A5.02 INTERIOR STOREFRONT MULLION
6"=1'-0"

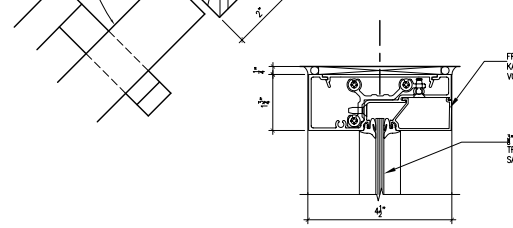

4 A5.02 INTERIOR STOREFRONT HEAD
6"=1'-0"

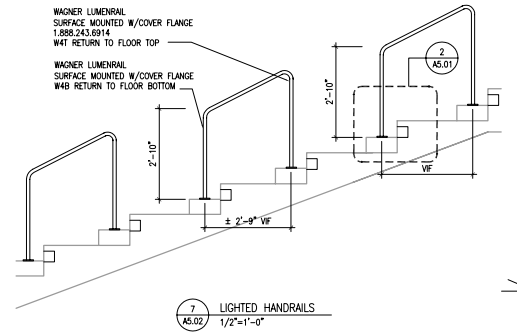

7 A5.02 LIGHTED HANDRAILS
1/2"=1'-0"

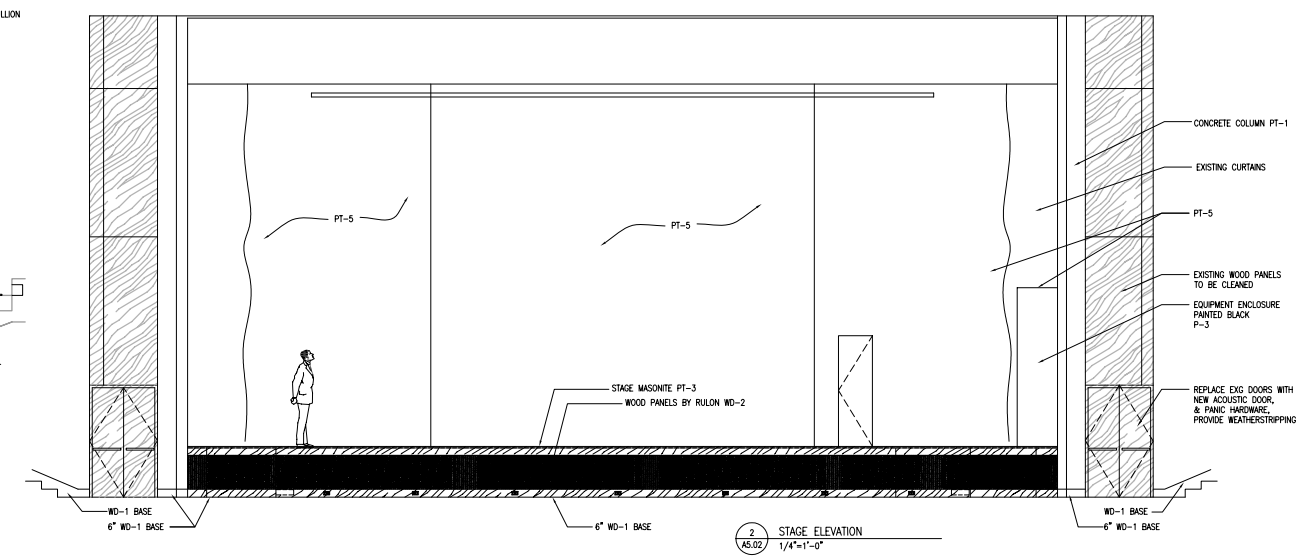

2 A5.02 STAGE ELEVATION
1/4"=1'-0"

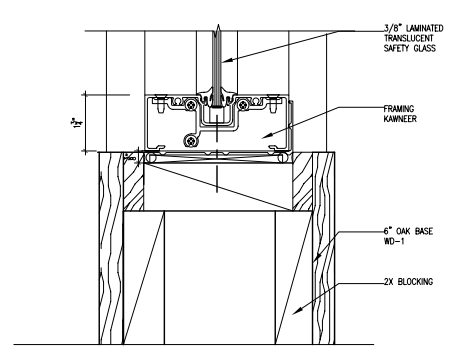

3 A5.02 INTERIOR STOREFRONT SILL
6"=1'-0"

ROOM FINISH SCHEDULE

LOC	SPACE		FLOOR		BASE	WALLS								CEILING		NOTES
						N		E		S		W				
	ROOM #	NAME	MATERIAL	FINISH		MATERIAL	FINISH	MATERIAL	FINISH	MATERIAL	FINISH	MATERIAL	FINISH	MATERIAL	FINISH	
FIRST FLOOR	102	THEATER	CONC/STL	SS-1/C-1	EXG	EXG	EXG	EXG	EXG	EXG	EXG	EXG	EXG	EXG	PT-2	NEW WOOD BASE STAINED TO MATCH EXG. PANELING/ SEE DETAILS FOR OTHER BASE & FLR MATERIALS
	102A	VESTIBULE	EXG	C-1	WD-1	EXG/GWB	EXG/WD-1	GLASS	GL-1	EXG/GWB	EXG/WD-1	EXG	EXG	GWB	PT-2	WOOD BASE STAINED TO MATCH PANELING, PAINT ALL EXG CONCRETE & DOORS & FRAMES PT-1
	103	ROOM/STAIR	EXG	C-1	RB-1	GWB	PT-1	EXG CMU/GWB	PT-1	EXG CMU	PT-1	EXG CMU	PT-1	GWB	PT-2	PAINT NEW LANDING PT-1
	104	ROOM/STORAGE	EXG	C-1	RB-1	EXG/GWB	PT-1	GWB	PT-1	EXG CMU/GWB	PT-1	EXG CMU	PT-1	GWB	PT-2	
	105	STAGE	MASONITE	PT-3	EXG	EXG CMU	PT-5	EXG CMU	PT-5	EXG CMU	PT-5			EXG	PT-5	
	201	PROJECTION BOOTH	EXG	C-1	RB-1	EXG	PT-1	EXG	PT-1	EXG	PT-1	EXG	PT-1	EXG	PT-2	

MATERIAL FINISH LEGEND

CODE	MATERIAL	MANUFACTURER	REP. CONTACT	SPECIFICATION	COLOR	FINISH	NOTES
GL-1	GLASS	MC GRORY GLASS	(800)220.3799	BEYB-067	TRANSLUCENT LAMINATED		VESTIBULE
GL-2	GLASS				CLEAR TEMPERED		PROJECTION BOOTH WINDOW
C-1	CARPET	BENTLEY PRINCE STREET	ROBIN RETBLATT 212.463.0606	RHYTM & BLUES, #8RB3406301; BLUES NOCTURNE 887084	BLUE/ GREY/ EMERALD		STEPS AND SPACES BETWEEN STAGE AND SEATING; VESTIBULE, SEE PLAN; SEE *2
SS-1	SPECIAL SURFACE	STONHARD	ED THOMPSON 917.407.3407	STONKOTE HB4	PEWTER W/GS7 FLAT		STEPS AT SEATING AREA, HORIZONTAL & VERTICAL SURFACES, SEE PLAN, SEE *1
M-1	THEATRICAL MASONITE			HIGH IMPACT/WATER PROOF	PTD BLACK	SEALED	MATCH EXISTING
PT-1	VARIES	BENJAMIN MOORE		VALLEY FORGE TAN	AC-35	AS NOTE *4	WALLS/CONC. COLUMNS/LOW PARTITIONS/FASCIAS
PT-2	CEILINGS	BENJAMIN MOORE		DECORATORS WHITE	WHITE	AS NOTE *4	CEILINGS
PT-3	MASONITE FLOORS	BENJAMIN MOORE		BLACK DECK PAINT	BLACK	AS NOTE *4	STAGE FLOOR
PT-4	NOT USED						
PT-5	VARIES	BENJAMIN MOORE		BLACK	BLACK		STAGE WALLS
WD-1	EXISTING WOOD TRIM & PANELING			OAK VENEER/HARD WOODS/STAIN COLOR & SHEEN	TO MATCH EXG		EXG WOOD TO BE CLEANED AND REPAIRED
WD-2	WOOD	RULON	RON MASTERS 917.842.8604	PG 8-10-32 OAK SOLIDS/ RED OAK	MATCH EXG	RED OAK	STAGE SURROUND
RB-1	RUBBER	ROPPE	1.800.537.9527	PINNACLE RUBBER BASE, 6" HIGH, STANDARD TOE BASE 5/8"	DARK GREY #150		ALL RUBBER PRODUCTS SEE NOTE *3
RN-2	RUBBER	ROPPE	1.800.537.9527	#15 DOUBLE FLANGE CARPET STAIR NOSING	DARK GREY #150		ALL RUBBER PRODUCTS SEE NOTE *3
RN-3	RUBBER	ROPPE	1.800.537.9527	#38 GLUE DOWN CARPET EDGE	DARK GREY #150		ALL RUBBER PRODUCTS SEE NOTE *3

NOTES:

*1. FOLLOW MANUFACTURERS RECOMMENDATIONS FOR PREPARATION OF EXISTING CONCRETE & STEEL FASCIA SURFACE PRIOR TO COATING.

*2. ALL CARPET SURFACES MUST BE CLEANED OF EXISTING ADHESIVES & DUST FREE. C-1 WILL BE ADHESIVE APPLIED ACCORDING TO MANUFACTURER RECOMMENDED INSTALLATION, # 535U.

*3. ALL FLOOR AREAS WHERE ROPPE NOSINGS, TRANSITION STRIPS, & CARPET EDGING WILL APPLY MUST BE FREE OF EXISTING ADHESIVES, DIRT, DUST, OILS, ETC. ADHESIVE TYPE & DETAILS SMUST BE APPLIED AS PER MANUFACTURER INSTRUCTIONS.

*4. • ALL WALLS/ CONCRETE COLUMNS, FASCIAS – EGGSHELL FINISH
• ALL TRIM – SEMIGLOSS FINISH
• ALL CEILINGS – FLAT FINISH

Avram Theater
First Floor Renovation
SUNY Stony Brook
Southampton

STONY BROOK
STATE UNIVERSITY OF NEW YORK

Beyer Blinder Belle
Architects & Planners LLP

41 East 11 Street
New York, NY 10003
212.777.7800

Structural

Cameron Engineering & Associates, LLP
100 Sunnyside Boulevard, Suite 100
Woodbury, NY 11797
516.827.4900

Not For Construction

No	Date	Description
2	29.10.07	Pricing Set
1	20.10.07	Pricing Set

Issued/Revised
Drawing Title

Section & Details

Scale: As Noted
Date: 15 October 2007
Project No.: 2075.03
Drawing No.:

A5.02

H:\2075.03\2007_10.29_Bid Set\2075.03_A2_A1.01.dwg Plotted on: 11/19/07 – 6:01pm